CS698Y: Modern Memory Systems
Lecture-13 (Cache Compression)

Biswabandan Panda

biswap@cse.iitk.ac.in

https://www.cse.iitk.ac.in/users/biswap/CS698Y.html

Data Patterns: Examples

A[i][j]=0

0x00000000	0x00000000	0x00000000	0x00000000

4 Bytes

A[i][j]=constant

0x333333FF	0x333333FF	0x333333FF	0x333333FF

Narrow values (small value in large data type)

0x00000001	0x00000002	0x00000003	0x00000004

*ptr

0x888888C0	0x888888C8	0x888888D0	0x888888D8

Base + Delta Encoding [PACT '12]

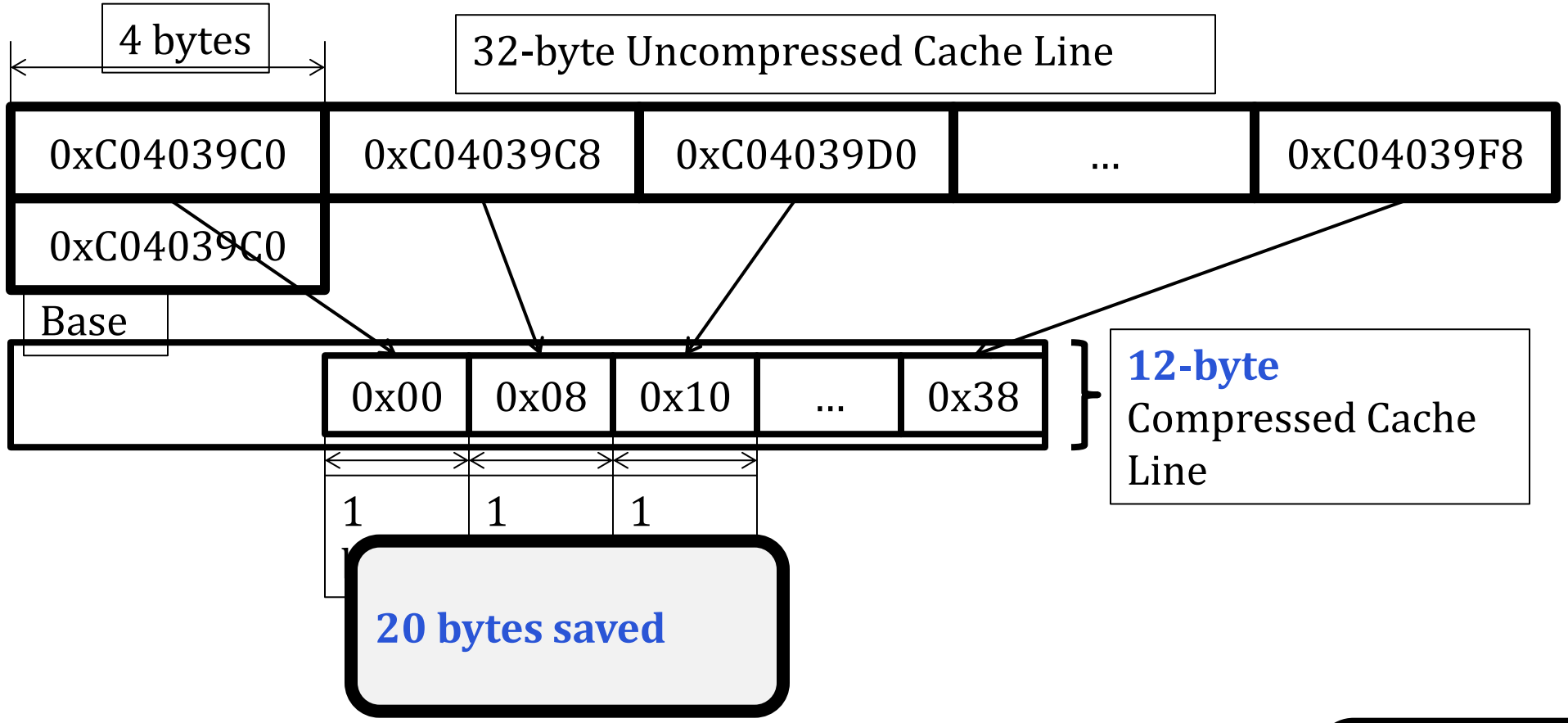

✓ **Fast Decompression:** vector addition

✓ **Effective:** good compression ratio

✓ **Simple Hardware:** arithmetic and comparison

BDI: Decompressor

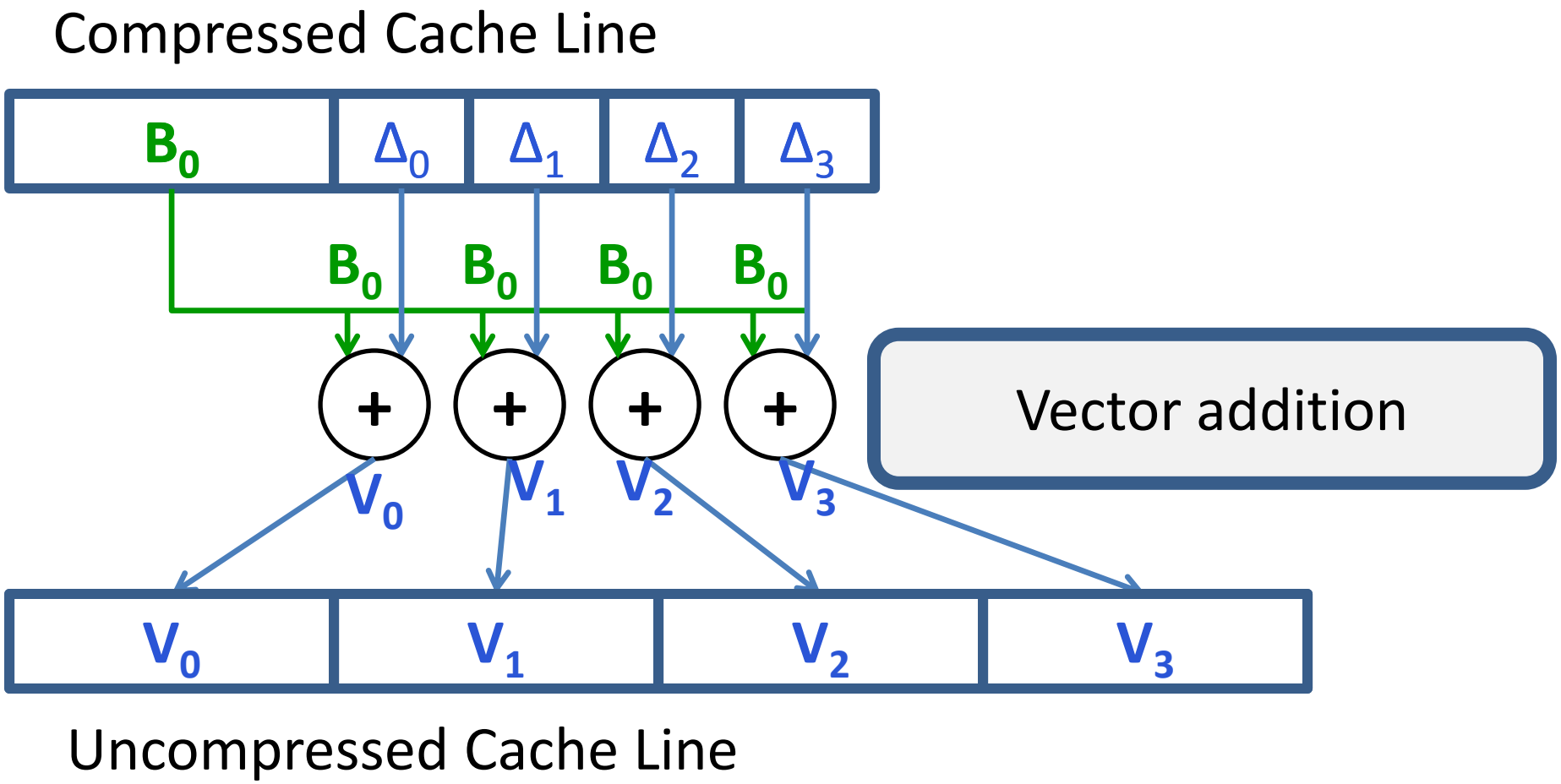

BDI: Compressor

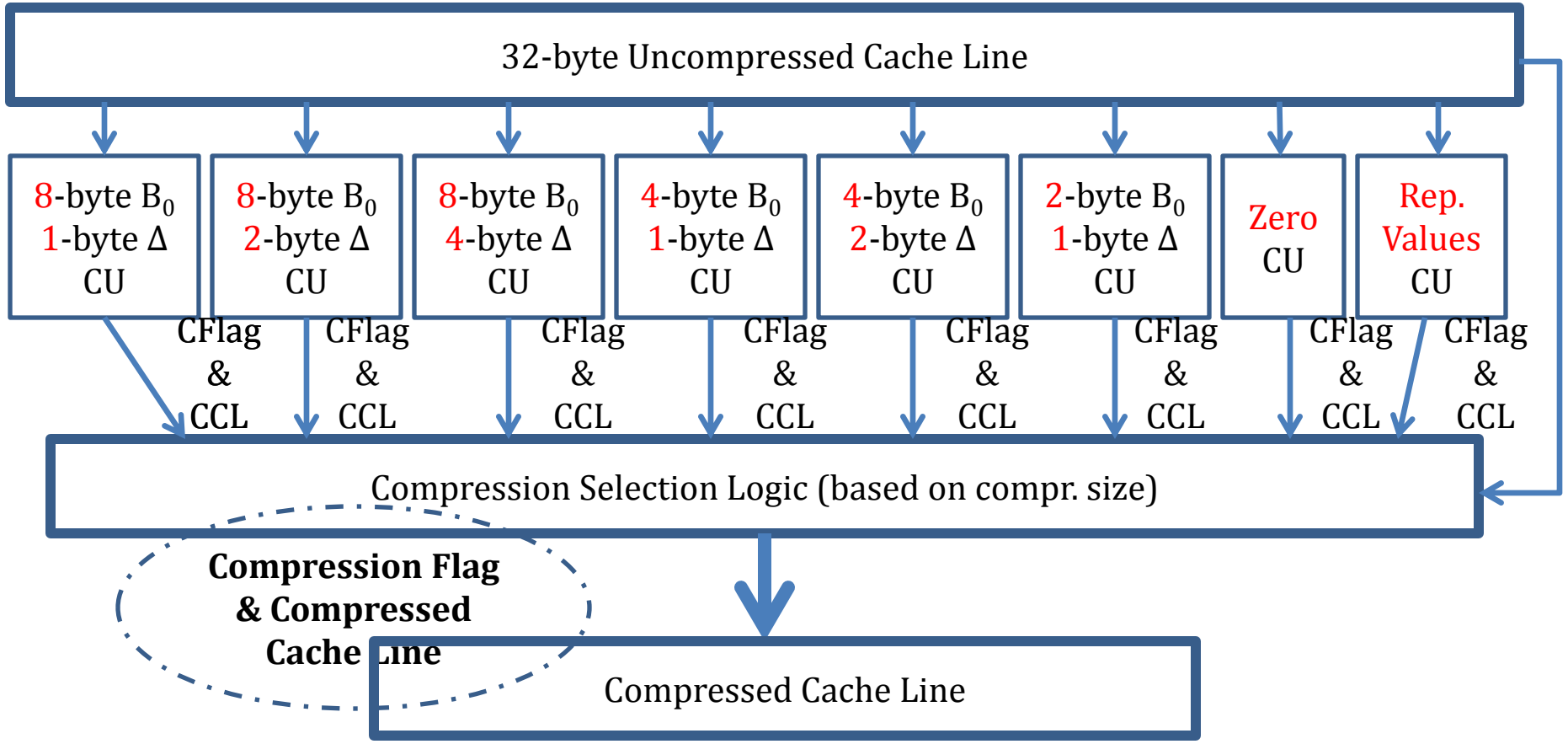

Conventional Cache Organization

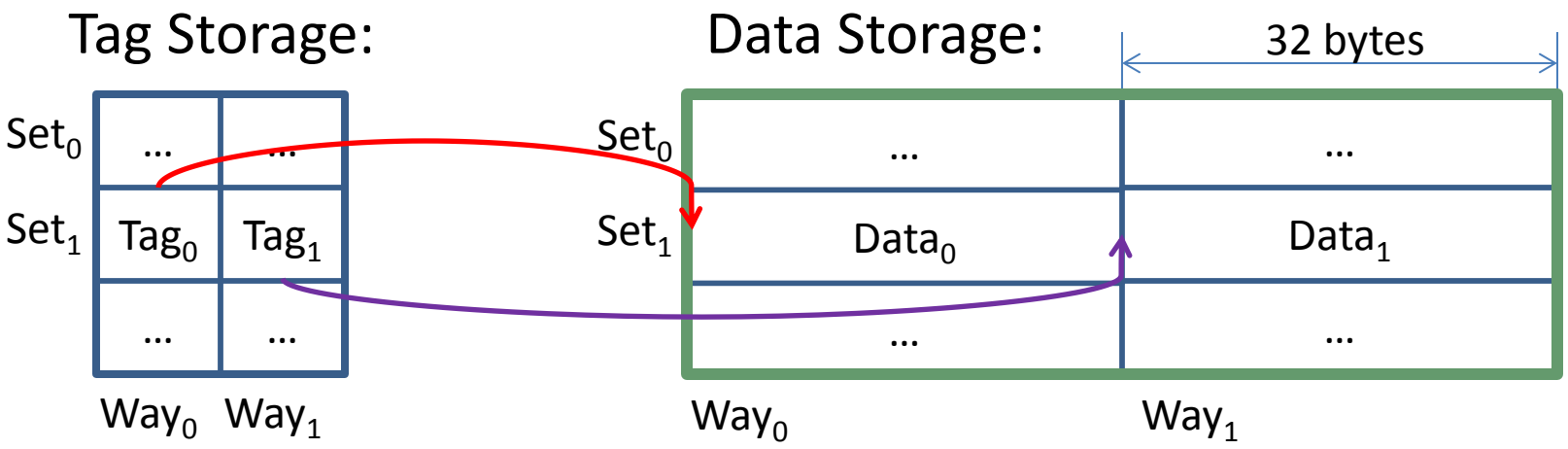

BDI Cache Organization

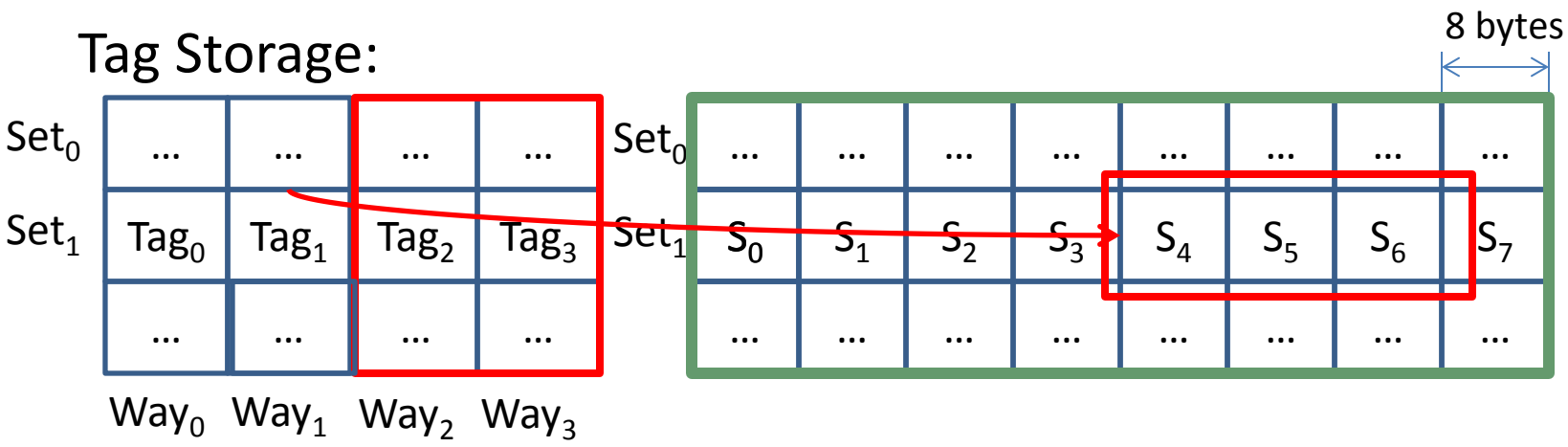

Twice as many tags
Tags map to multiple adjacent segments